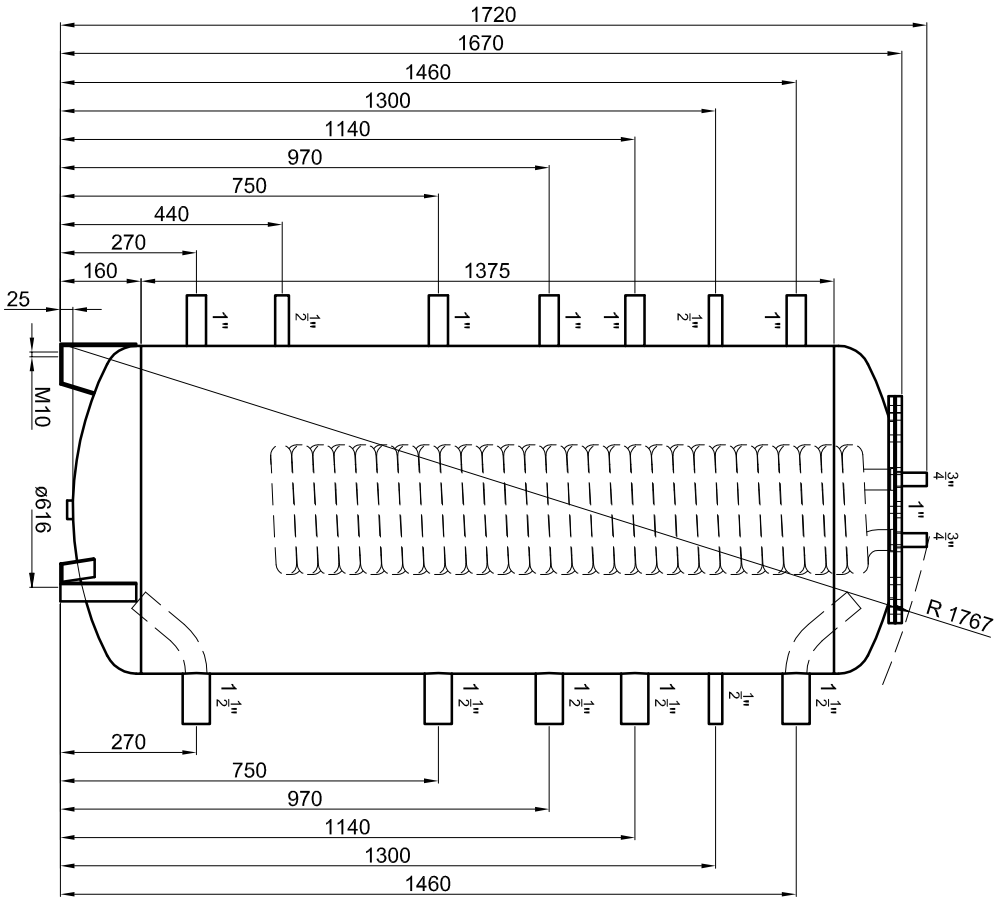
1720
1670
1460
1300
1140
970
750
440
270
160
1375
25
M10
ø616
1"
1/2"
3/4"
R 1767

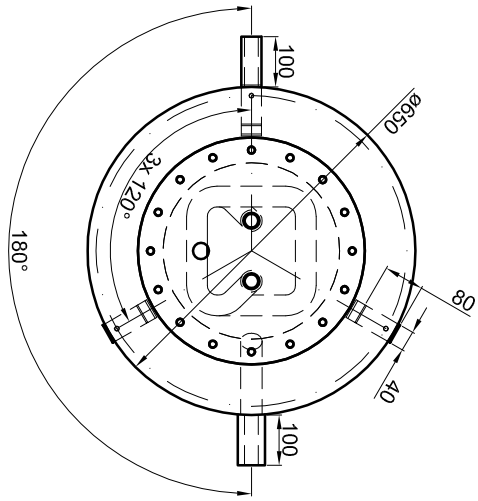
100
ø650
3x 120°
180°
80
40